由 Autodesk 教育版产品制作

All Pages Of This Edition Approved			
Signature:		Date:	

REV.	DESCRIPTION	REVISER	DATE
A0	First issue	luojinwei	2014.06.10
A1	改FPC和逻辑	luojinwei	2014.06.13
A2	改AK脚引线长度为25MM	luojinwei	2014.07.29
A3	FPC上增加定位孔和双面胶,增加易撕贴，去掉背光	luojinwei	2015.03.04
A4	增加背光	luojinwei	2015.05.19
A5	增加A,K引线长度	luojinwei	2015.06.08
A6	改FPC上定位孔的位置	luojinwei	2015.08.06

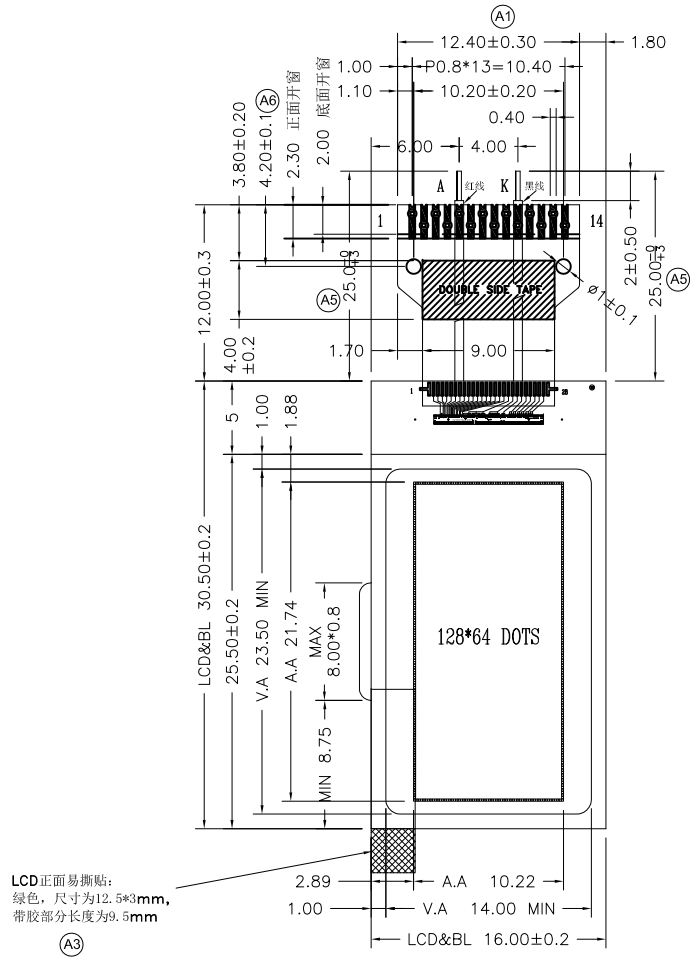

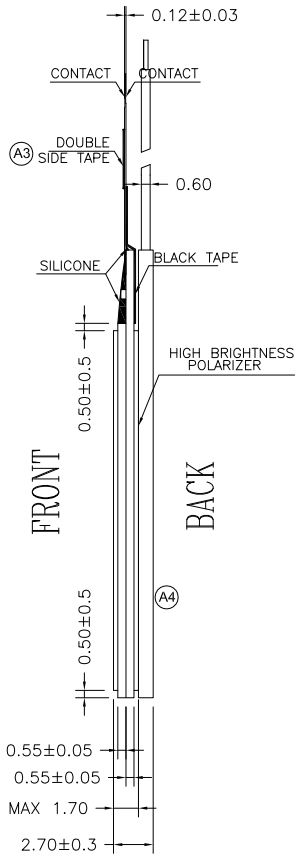

PIN ASSIGNMENT

NO.	NAME.
1	NC
2	CS0
3	RSTB
4	CD
5	SCK(D0)
6	SDA(D5~D3)
7	VDD
8	VSS
9	VB0-
10	VB0+
11	VB1-
12	VB1+
13	VLCD
14	NC

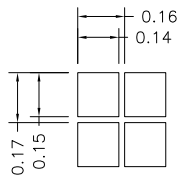

DOTS SIDE
SCALE 20:1

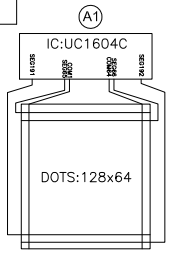

LCD LAYOUT

Specifications:
1. Display Mode: FSTN/Transflective/Positive.
2. Viewing Angle: 6 O'clock.
3. Drive Method: 1/65 Duty 1/9 Bias, Vop=10.5V, Vdd=3.0V.
4. Top: −10°C~+60°C, Tst: −20°C~+70°C.
5. Connector: COG+FPC.
7. Drive IC: UC1604C
8. Backlight:1PCS WHITE LED,If=15mA & Vf=3.0±0.10V
9. With" * " Mark Dimensions Are Important Dimensions.

LUMMAX ELECTRONICS CO.,LTD

Unspecified Tolerance:	±0.20	UNITS: mm	DATE:	MODEL NUMBER : HFG12864-130-PFDSW-R-A6		SHEET:	1 OF 1
DESIGN BY:		luojinwei	2015.08.06				
CHECKED BY:						DATE:	2015.08.06
APPROVED BY:				DO NOT SCALE THIS DRAWING.	PROJECTION		

由 Autodesk 教育版产品制作
由 Autodesk 教育版产品制作
由 Autodesk 教育版产品制作