| All Pages Of This Edition Approved | | | |
|---|---|---|---|
| Signature: | | Date: | |

由 Autodesk 教育版产品制作

| REV. | DESCRIPTION | REVISER | DATE |
|---|---|---|---|
| A0 | 新出图 | luojinwei | 2012/8/9 |
| A1 | 改FPC上的丝印 | luojinwei | 2012/11/20 |

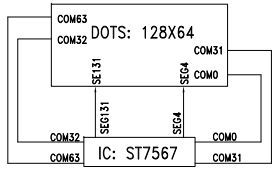


COM & SEG LAYOUT

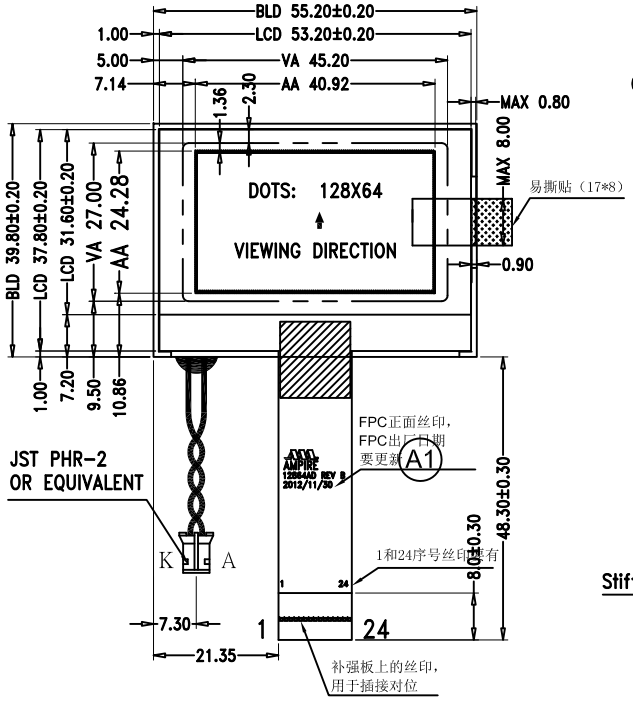


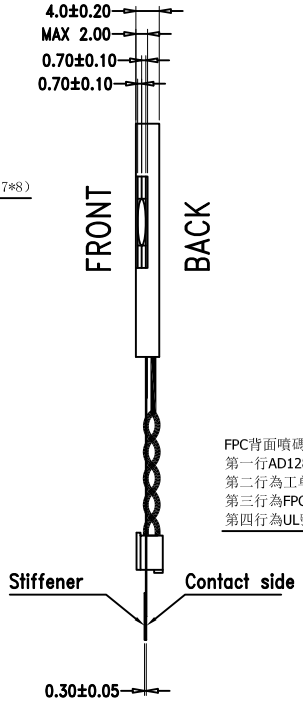


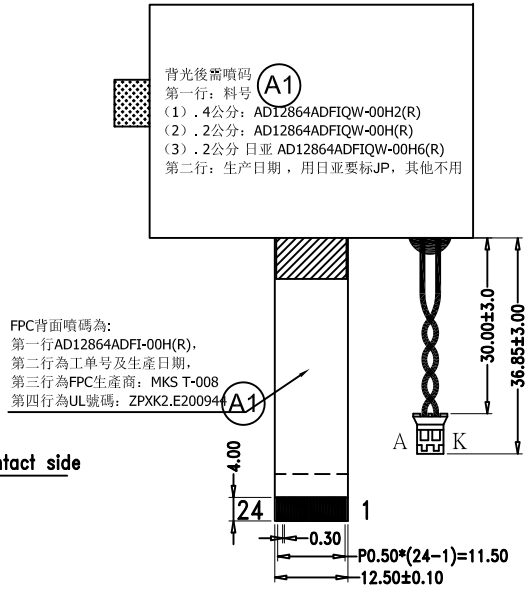


| PIN | SYMBOL | PIN | SYMBOL |
|---|---|---|---|
| 1 | NC | 13 | D6 |
| 2 | /CS1 | 14 | D7 |
| 3 | /RES | 15 | VDD |
| 4 | A0 | 16 | VSS |
| 5 | /WR(R/W) | 17 | VSS |
| 6 | /RD(E) | 18 | V0 |
| 7 | D0 | 19 | XVO |
| 8 | D1 | 20 | VM |
| 9 | D2 | 21 | VG |
| 10 | D3 | 22 | C86 |
| 11 | D4 | 23 | P/S |
| 12 | D5 | 24 | NC |

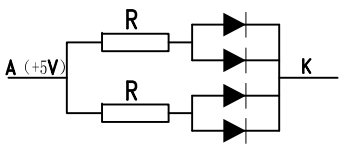


BACKLIGHT CIRCUIT

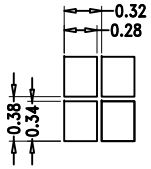


SCALE:20:1

Specifications:

1. Display Mode: FSTN/Black-White/Transflective/Positive.
2. Viewing Angle: 6 O'clock.
3. Drive Method: 1/65 Duty 1/9 Bias, Vop=9.0V, Vdd=3.0V.
4. Top: -20°C~+70°C, Tst: -30°C~+80°C.
5. Connector: COG+FPC.
6. Backlight: 1*4 PCS WHITE LED Side Backlight; If<60mA & Vf=5.0±0.2V.
   X=0.260~0.32, Y=0.260~0.32.
   Luminance: >70cd/m2(Backlight Surface).Uniformity: >75%.
7. Drive IC: ST7567
8. RoHS Compliant: Yes.
9. With" * " Mark Dimensions Are Important Dimensions.

# LUMMAX ELECTRONICS CO.,LTD

| | | | | | | |
|---|---|---|---|---|---|---|
| Unspecified Tolerance: | ±0.20 | UNITS: mm | DATE: | MODEL NUMBER : HFG12864-40-PFUSW-R_A1 | | SHEET: 1 Of 1 |
| DESIGN BY: | | luojinwei | 2012/8/9 | | | DATE: 2012/8/9 |
| CHECKED BY: | | | | | | |
| CUSTOMER NO: | | | | DO NOT SCALE THIS DRAWING. | PROJECTION | |

由 Autodesk 教育版产品制作